| REVISIONS | |
|---|---|
| ISS | DESCRIPTION\DATE |
| | |

RoHS COMPLIANT

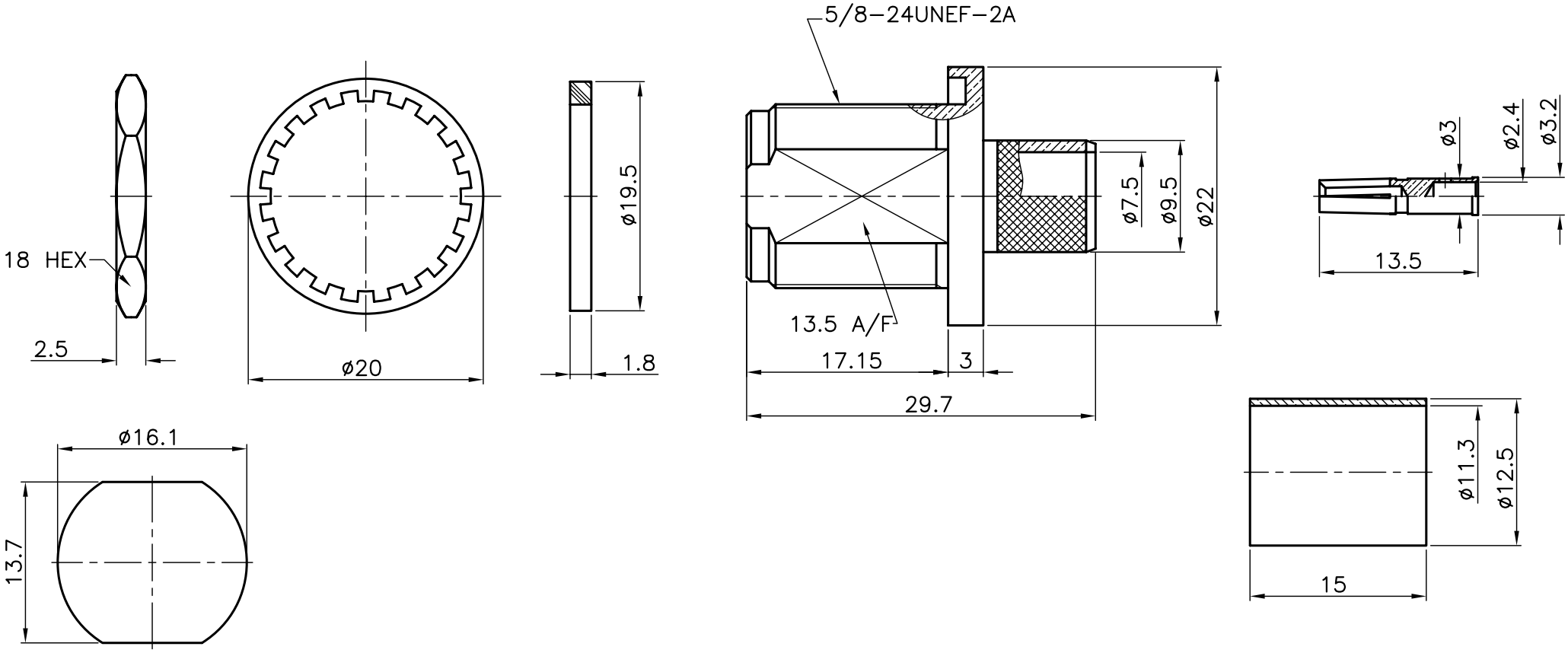


PANEL HOLE

CONNECTORS CABLES
CCS
SPECIALISTS LTD.

| | | |
|---|---|---|
| TITLE: N FEMALE BULKHEAD CRIMP (FOR RG214/U) | APRD: | UNLESS OTHERWISE SPECIFIED TOLERANCES<br>0.5–6 = ±0.2<br>>6–30 = ±0.4<br>>30–120 = ±0.6<br>>120–315 = ±1<br>>315–1000 = ±1.6<br>ANGLES = ±5° |
| | CHKD: | |
| | DR: | |
| PART NO: NBJCR214SS | DATE: 11/14/11" | UNIT: mm |
| DR. NO: 55006–016(N007B214–TSS) 029 | SHEET: . | SCALE: 2/1 |

| NO. | DESCRIPTION | MATERIAL | FINISH |
|---|---|---|---|
| | | | |
| | | | |
| | NUT | BRASS | SILVER |
| | WASHER | STEEL | SILVER |
| | GASKET | RUBBER | BLACK |
| | CONTACT PIN | BRASS | SILVER |
| | INSULATOR | TEFLON | WHITE |
| | BODY | BRASS | SILVER |

ISO 9001 certificate